ТЕХНИКИЙН ТОДОРХОЙЛОЛТ

1. Ерөнхий шаардлага:

Монгол Оросын хамтарсан сургуульд сүлжээний тоног төхөөрөмжийг нийлүүлж, суурилуулан шаардлагатай тохиргоонуудыг хийнэ. Тоног төхөөрөмжүүдийг суурилуулахдаа өрөөний засал чимэглэлийг гэмтээхгүй байхаас гадна үйл ажиллагаанд ашиглаж байгаа цахилгааны холболт, сүлжээнд ажлын цагаар нөлөөлөл үзүүлэхгүйгээр хийж гүйцэтгэнэ. Эвдгэл гэмтэл учируулсан тохиолдолд өөрийн зардлаар засвар үйлчилгээ хийж хүлээлгэж өгнө.

Д/д	Нэр	Тодорхойлолт	Тоо хэмжээ	Хэмжих нэгж
1	Дотор камер	1. 4MP, 1/3” CMOS image sensor, low illuminance, high image definition · Outputs max. 4MP (2560 × 1440) @25/30 fps · H.265 codec, high compression rate, ultra-low bit rate · Max. IR distance: 10 m · Rotation mode, WDR, 3D DNR, HLC, BLC, digital watermarking, applicable to various monitoring scenes · H.264/H.265, flexible coding, applicable to various bandwidth and storage environments · Alarm: 1 in, 1 out; 256 G SD card, built-in Mic and speaker · Supports 256 G Micro SD card · 12V DC/PoE power supply, easy for installation	27	ш
2	Бичигч төхөөрөө	1. · Smart H.265+/H.265/Smart H.264+/H.264/MJPEG · Max 320Mbps Incoming Bandwidth · Up to 12MP Resolution for Preview and Playback · 2HDMI/2VGA simultaneous video output 2. 64 хүртэлх сувгийн Multi-screen Display 1st Screen: 64CH: 1/4/8/9/16/25/36/64 2nd Screen: 1/4/8/9/16	1	ш
3	Гадна камер	1. · 1/3” 4Megapixel progressive scan CMOS · H.265&H.264 triple-stream encoding · 25/30fps@4M(2688×1520) · Smart Detection supported · WDR(120dB), Day/Night(ICR), 3DNR, AWB, AGC, BLC · Multiple network monitoring: Web viewer, CMS(DSS/PSS) & DMSS · 3.6mm fixed lens (6mm, 8mm, 12mm optional) · Max. IR LEDs	6	ш

		Length 80m · Micro SD memory, IP67, IK10, PoE		
4	Poe switch 16port	1. Layer 2 Managed PoE Switch 2. Supports the IEEE802.3af, IEEE802.3at, and Hi-PoE Standards 3. 240 W PoE Budget 4. 250 m (820ft) PoE Transmission PoE Management, PoE Seţ ing/Event Statistics /Green PoE • Search and Upgrade via Configuration Tool High Lightning Protecion Design Non-blocking Video Transmission	4	ш
5	Дэлгэц 43”	1. Industrial-grade DID LCD Panel for Continuous Operation 2. 1920 x 1080p Resolution 3. High-fidelity Digital Signal Processing for Vivid Video 4. Built-in 3D Comb Filter and 3D Noise Reduction 5. Fast Response Time (5 ms) with no Image Ghosting 6. Built-in Speaker 7. 16.7 Million Colors 8. Supports HDMI and VGA Video Input 9.	1	ш
6	24 port switch	1. 10/100/1000тай 2UP link тай байх	1	ш
7	HDD	1. 4TB 3,5” sata тасратлгүй ажилгаанд зориулагсан байх	8	ш
8	speaker	1. Зарлан мэдээлэх 3-10W	18	ш
9	Сүлжээний кабел	Cat6	3	б
10	Дууний кабел	Дуу дамжуулах	2	б
11	Кабел Хамгаалар хэрэгсэл	Хар хоолой	3	б
12	Кабел далдлагч	Цэвэр үзэмжтэй	30	м
13	Сүлжээний толгой	Rj45 сайн чанартай	150	ш
14	Тогны уртасгагч	сайн чанартай раканд суурьлах зориулалтай	1	ш
15	Хамгаалалтын хайрцаг	Хананд суурилах 40х50 харьцаатай	3	ш
16	HDMI кабел	Дуу дүрс дамжуулах 1,5м	1	ш
17	Ажлын хөлс		1	ш

2.Барааны тодорхойлолт: БИЧЛЭГИЙН ТӨХӨӨРӨМЖИЙН ШААРДЛАГА-1 ширхэг

Technical Specification

System

Main Processor	Quad-core embedded processor
Operating System	Embedded LINUX

Audio and Video

IP Camera Input	/64 Channel
Two-way Talk	1 Channel Input, 2 Channel Output, RCA

Display

Interface	2 HDMI, 2 VGA
Resolution	HDMI1: 3840 × 2160 , 1920 × 1080 , 1280 × 1024, 1280 × 720 , 1024 × 768
	VGA1: 1920 × 1080 , 1280 × 1024, 1280 × 720 , 1024 × 768
	HDMI2/VGA2: 1920 × 1080
Decoding Capability	4-ch@8MP(30fps), 16-ch@1080P(30fps)
Multi-screen Display	1st Screen: 16CH: 1/4/8/9/16 32CH: 1/4/8/9/16/25/36 64CH: 1/4/8/9/16/25/36/64 2nd Screen: 1/4/8/9/16
OSD	Camera title, Time, Camera lock, Motion detection, Recording

Recording

Compression	Smart H.265+/H.265/Smart H.264+/H.264/MJPEG
Resolution	12MP, 8MP, 6MP, 5MP, 4MP, 3MP, 1080P, 1.3MP, 720P, D1 etc.
Bit Rate	16Kbps ~ 20Mbps Per Channel
Record Mode	Manual, Schedule (Regular, MD(Motion Detection), Alarm, IVS), Stop
Record Interval	1 ~ 120 min (default: 60 min), Pre-record: 1 ~ 30 sec, Post-record: 10 ~ 300 sec

Video Detection and Alarm

Trigger Events	Recording, PTZ, Tour, Alarm Out, Video Push, Email, Snapshot, Buzzer and Screen Tips
Video Detection	Motion Detection, MD Zones: 396 (22 × 18), Video Loss and Tampering
Alarm input	16 Channel
Relay Output	6 Channel

Playback and Backup

Sync Playback	1/4/9/16
Search Mode	Time/Date, Alarm, MD and Exact Search (accurate to second)
Playback Function	Play, Pause, Stop, Rewind, Fast play, Slow Play, Next File, Previous File, Next Camera, Previous Camera, Full Screen, Backup Selection, Digital Zoom
Backup Mode	USB Device/Network/eSATA Device

Third-party Support

Network

Interface	2 RJ-45 Ports (10/100/1000Mbps) Independent or Joint Working
PoE	N/A
Network Function	HTTP, HTTPS, TCP/IP, IPv4/IPv6, UPnP, SNMP, RTSP, UDP, SMTP, NTP, DHCP, DNS, IP Filter, PPPoE,DDNS, FTP, Alarm Server, IP Search (Support Dahua IP camera, DVR, NVS, etc.), P2P
Max. User Access	128 users
Smart Phone	iPhone, iPad, Android
Interoperability	ONVIF 2.4, SDK, CGI

Storage

Internal HDD	8 SATA III Ports, Up to 10 TB capacity for each HDD
eSATA	1 eSATA

Auxiliary Interface

USB	4 USB Ports (2 Rear USB 3.0 , 2 Front USB 2.0)
RS232	1 Port, for PC Communication and Keyboard
RS485	1 Port, for PTZ Control

Electrical

Power Supply	Single, AC100V ~ 240V, 50 ~ 60 Hz
Power Consumption	<16.7W (Without HDD)
Fan	Smart fan, automatically adjust running speed

Environmental

Operating Conditions	-10°C ~ +55°C (+14°F ~ +131°F), 86 ~ 106kpa
Storage Conditions	-20°C ~ +70°C (-4°F ~ +158°F), 0 ~ 90% RH

Construction

Dimensions	2U, 440mm x 451.5mm x 94.9mm ; (17.3" x 17.7" x 3.7")
Net Weight	6.55kg (14.4 lb) (without HDD)
Gross Weight	9.5kg (20.94 lb) (without HDD)
Installation	Rack-mounted

Certifications

CE	EN55022, EN55024, EN50130-4, EN60950-1
FCC	Part 15 Subpart B, ANSI C63.4-2014
UL	UL 60950-1

Third-party Support	Arecont Vision, Airlive, AXIS, Canon, Dynacolor, JVC, LG, Panasonic, Pelco, PSIA, Samsung, Sanyo, Sony, Watchnet and more

Ordering Information

Type	Part Number	Description
16 Channel NVR	DHI-NVR5816-4KS2	16 Channel 2U 4K&H.265 Pro Network Video Recorder
32 Channel NVR	DHI-NVR5832-4KS2	32 Channel 2U 4K&H.265 Pro Network Video Recorder
64 Channel NVR	DHI-NVR5864-4KS2	64 Channel 2U 4K&H.265 Pro Network Video Recorder
Accessories	ESS1504C	4 HDDs eSATA Storage (Please confirm with Technical Support for HDD capacity & compatibility)

Dimensions (mm)

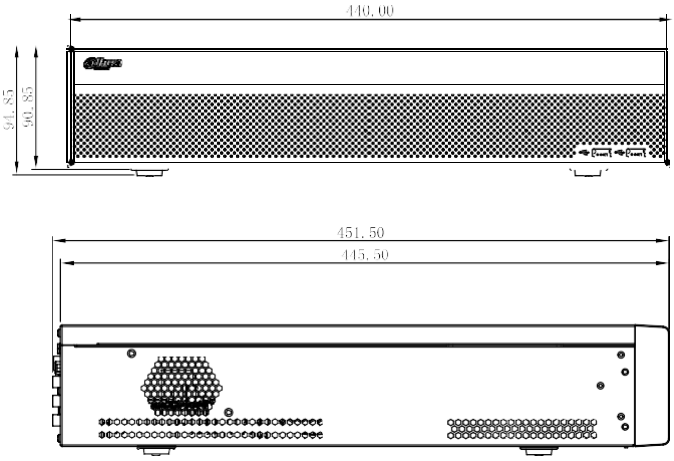

Accessories

ESS1504C

Rear Panel

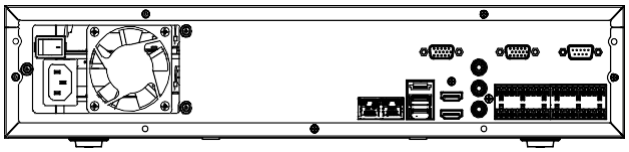

System Overview

With upgraded H.265 encoding technology, Eco-savvy series brings high efficient video compression capability. It can save bandwidth and storage. Meanwhile, the series features starlight, smart IR technology and intelligent image analysis techniques. This series supports reminder function, meanwhile fully protected from dust and water, certified to IP67 and vandal resistant to IK10 standard.

Functions

ePoE technology

The ePoE technology of Dahua, designed internally, adopts advanced 2D-PAM3 coding modulation from physical layer, and realizes full duplex transmission over 800 meters at the speed of 10Mbps, or 300 meters at the speed of 100Mbps via Cat 5 or coaxial cable media. Besides, it supports PoE and PoC power supply technology which has greatly simplified construction and wiring. Dahua ePoE technology is a new way to accomplish long distance transmission between IP cameras and network switch. It allows more flexible surveillance system design, improves reliability and saves construction and wiring cost.

Wide Dynamic Range(WDR)

The camera achieves vivid images, even in the most intense contrast lighting conditions, using industry-leading wide dynamic range (WDR) technology. For applications with both bright and low lighting conditions that change quickly, true WDR (120 dB) optimizes both the bright and dark areas of a scene at the same time to provide usable video.

Intelligent Video System (IVS)

IVS is a built-in video analytic algorithm that delivers intelligent functions to monitor a scene for Tripwire violations, intrusion detection, and abandoned or missing objects. A camera with IVS quickly and accurately responds to monitoring events in a specific area. In addition to scene analytics, the camera supports face detection to quickly capture a face and upload the image to a server. The camera also offers tamper detection by recognizing a dramatic scene change and generating a

© 2017 Dahua . All rights reserved. Design and specifications are subject to change without notice

- 1/3” 4Megapixel progressive scan CMOS
- H.265&H.264 triple-stream encoding
- 25/30fps@4M(2688×1520)
- Smart Detection supported
- WDR(120dB), Day/Night(ICR), 3DNR, AWB, AGC, BLC
- Multiple network monitoring: Web viewer, CMS(DSS/PSS) & DMSS
- 3.6mm fixed lens (6mm, 8mm, 12mm optional)
- Max. IR LEDs Length 80m
- Micro SD memory, IP67, IK10, PoE

warning message to inspect the camera.

Environmental

Dahua cameras operate in extreme temperature environments, rated for use in temperatures from -30° C to +60° C (-22° F to +140° F) with 95% humidity, allowing the camera to operate in the harshest environments.

Protection(IP67, wide voltage)

The camera allows for ±30% input voltage tolerance, suitable for the most unstable conditions for outdoor applications. Its 4KV lightning rating provides effective protection for both the camera and its structure against lightning. Subjected and certified to rigorous dust and immersion tests (IP67), the camera is the choice for installation in even the most unforgiving environments.

Smart H.265+

Smart H.265+ is the optimized implementation of the H.265 codec that uses a scene-adaptive encoding strategy, dynamic GOP, dynamic ROI, flexible multi-frame reference structure and intelligent noise reduction to deliver high-quality video without straining the network. Smart H.265+ technology reduces bit rate and storage requirements by up to 70% when compared to standard H.265 video compression.

Technical Specification

Camera

Image Sensor	1/3” 4Megapixel progressive scan CMOS
Effective Pixels	2688(H)x1520(V)
RAM/ROM	512MB/32MB
Scanning System	Progressive
Electronic Shutter Speed	Auto/Manual, 1/3~1/100000s
Minimum Illumination	0.06Lux/F1.6(Color,1/3s,30IRE) 0.4Lux/F1.6(Color,1/30s,30IRE) 0Lux/F1.6(IR on)
S/N Ratio	More than 50dB
IR Distance	Distance up to 80m (262.5ft)
IR On/Off Control	Auto/ Manual
IR LEDs	4

Lens

Lens Type	Fixed
Mount Type	Board-in
Focal Length	3.6mm (6mm, 8mm, 12mm optional)
Max. Aperture	F1.6 (F1.6, F1.6, F1.6)
Angle of View	H: 83° (55°, 38°, 25°), V: 45° (31°, 21°, 14°)
Optical Zoom	N/A
Focus Control	Fixed
Close Focus Distance	1.5m (3.1m, 3.6m, 10.8m)

	Lens	Detect	Observe	Recognize	Identify
	3.6 mm	80m(262ft)	32m(105ft)	16m(52ft)	8m(26ft)
DORI Distance	6.0 mm	120m(394ft)	48m(157ft)	24m(79ft)	12m(39ft)
	8.0 mm	110m(361ft)	44m(144ft)	22m(72ft)	11m(36ft)
	12.0mm	250m(820ft)	100mm(328ft)	50m(164ft)	25m(82ft)

Pan/Tilt/Rotation

Pan/Tilt/Rotation Range	Pan:0˚~360˚; Tilt:0˚~90˚; Rotation:0˚~360˚

Intelligence

IVS	Tripwire, Intrusion, Object Abandoned/Missing
Advanced Intelligent Functions	Face Detection

Video

Compression	H.265+/H.265/H.264+/H.264
Streaming Capability	3 Streams
Resolution	4M(2688×1520)/3M(2304×1296)/ 1080P(1920×1080)/1.3M(1280x960)/ 720P(1280×720)/D1(704×576/704×480)/ VGA(640×480)/CIF(352×288/352×240)
Frame Rate	Main Stream: 4M(1~25/30fps) Sub Stream: D1(1~25/30fps) Third Stream: 720P(1~25/30fps)
Bit Rate Control	CBR/VBR
Bit Rate	H.264: 24K ~ 10240Kbps H.265: 14K ~ 9984Kbps
White Balance	Auto/Natural/Street Lamp/Outdoor/Manual
Gain Control	Auto/Manual
Noise Reduction	3D DNR
Motion Detetion	Off / On (4 Zone, Rectangle)
Region of Interest	Off / On (4 Zone)
Electronic Image Stabilization (EIS)	N/A
Smart IR	Support
Defog	N/A
Digital Zoom	16x
Flip	0°/90°/180°/270°
Mirror	Off / On
Privacy Masking	Off / On (4 Area, Rectangle)

Audio

Compression	G.711a/ G.711Mu/ AAC/ G.726

Network

Ethernet	RJ-45 (10/100Base-T)
Protocol	HTTP; HTTPs; TCP; ARP; RTSP; RTP; UDP; SMTP; FTP; DHCP; DNS; DDNS; PPPOE; IPv4/v6; QoS; UPnP;NTP; Bonjour; 802.1x; Multicast; ICMP; IGMP; SNMP
Interoperability	ONVIF, PSIA, CGI
Streaming Method	Unicast / Multicast
Max. User Access	10 Users /20 Users
Edge Storage	NAS Local PC for instant recording Mirco SD card 128GB
Web Viewer	IE, Chrome, Firefox, Safari
Management Software	Smart PSS, DSS, Easy4ip
Smart Phone	IOS, Android

Certifications

Certifications	CE (EN 60950:2000) UL:UL60950-1 FCC: FCC Part 15 Subpart B

Interface

Video Interface	N/A
Audio Interface	1/1 channel In/Out
RS485	N/A
Alarm	1 channel In: 5mA 5VDC 1 channel Out: 300mA 12VDC

Electrical

Power Supply	DC12V, PoE (802.3af)(Class 0)
Power Consumption	DC12V: 3.2W, 10.1W(IR On) PoE: 3.9W, 12W(IR On)

www.dahuasecurity.com

Day/Night	Auto(ICR) / Color / B/W
BLC Mode	BLC / HLC / WDR(120dB)

Environmental

Operating Conditions	-30° C ~ +60° C (-22° F ~ +140° F) / Less than 95% RH
Strorage Conditions	-30° C ~ +60° C (-22° F ~ +140° F) / Less than 95% RH
Ingress Protection	IP67
Vandal Resistance	IK10

Construction

Casing	Metal
Dimensions	244.1mm×79mm×75.9mm (9.61”×3.11”×2.99”)
Net Weight	0.815kg (1.80lb)
Gross Weight	1.08kg (2.38lb)

Accessories

Optional:

PFA135
Junction Box

PFA152-E
Pole Mount

LR1002
ePoE Over Coax Converter

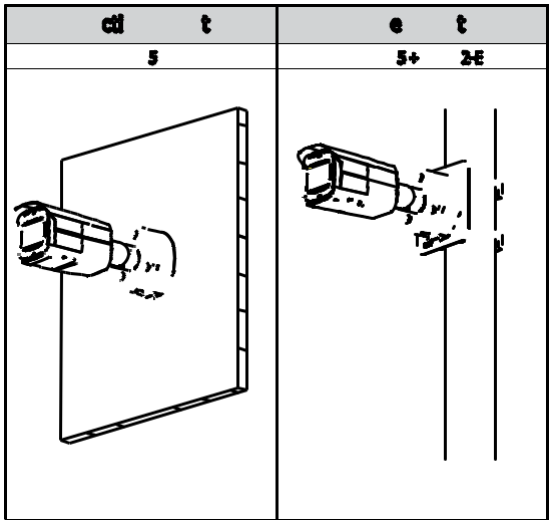

Ordering Information

Type	Part Number	Description
4MP camera	DH-IPC-HFW4431TP-ASE-0360B	4MP IR Mini Bullet Network Camera, WDR, PAL
	DH-IPC-HFW4431TN-ASE-0360B	4MP IR Mini Bullet Network Camera, WDR, NTSC
	IPC-HFW4431TP-ASE-0360B	4MP IR Mini Bullet Network Camera, WDR, PAL
	IPC-HFW4431TN-ASE-0360B	4MP IR Mini Bullet Network Camera, WDR, NTSC
	DH-IPC-HFW4431TP-ASE-0600B	4MP IR Mini Bullet Network Camera, WDR, PAL
	DH-IPC-HFW4431TN-ASE-0600B	4MP IR Mini Bullet Network Camera, WDR, NTSC
	IPC-HFW4431TP-ASE-0600B	4MP IR Mini Bullet Network Camera, WDR, PAL
	IPC-HFW4431TN-ASE-0600B	4MP IR Mini Bullet Network Camera, WDR, NTSC
	DH-IPC-HFW4431TP-ASE-0800B	4MP IR Mini Bullet Network Camera, WDR, PAL
	DH-IPC-HFW4431TN-ASE-0800B	4MP IR Mini Bullet Network Camera, WDR, NTSC
	IPC-HFW4431TP-ASE-0800B	4MP IR Mini Bullet Network Camera, WDR, PAL
	IPC-HFW4431TN-ASE-0800B	4MP IR Mini Bullet Network Camera, WDR, NTSC
	DH-IPC-HFW4431TP-ASE-1200B	4MP IR Mini Bullet Network Camera, WDR, PAL
	DH-IPC-HFW4431TN-ASE-1200B	4MP IR Mini Bullet Network Camera, WDR, NTSC
	IPC-HFW4431TP-ASE-1200B	4MP IR Mini Bullet Network Camera, WDR, PAL
	IPC-HFW4431TN-ASE-1200B	4MP IR Mini Bullet Network Camera, WDR, NTSC
Accessories (optional)	PFA135	Junction box
	PFA152-E	Pole Mount
	LR1002	ePoE Over Coax Converter

Junc on Mount
PFA135

Pole Mount
PFA135 + PFA152-E

Dimensions (mm/inch)

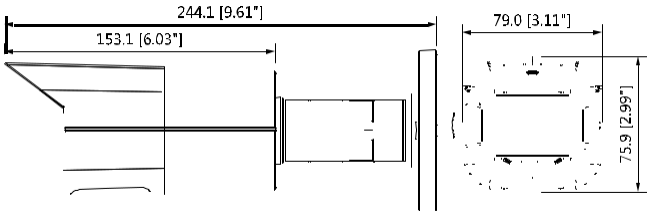

ДОТОР КАМЕРЫН ШААРДЛАГА:

・4MP, 1/3” CMOS image sensor, low illuminance, high image definition・Outputs max. 4MP (2560 × 1440) @25/30 fps
・H.265 codec, high compression rate, ultra-low bit rate・Max. IR distance: 10 m
・Rotation mode, WDR, 3D DNR, HLC, BLC, digital watermarking, applicable to various monitoring scenes
・H.264/H.265, flexible coding, applicable to various bandwidth and storage environments
・Alarm: 1 in, 1 out; 256 G SD card, built-in Mic and speaker・Supports 256 G Micro SD card
・12V DC/PoE power supply, easy for installation・Supports PIR

Series Overview

With features of simple installation, easy operation, and high performance-cost ratio, Dahua Entry series network camera is applicable to small and medium-sized scenes, such as homes/ residences, small-sized retail stores, and other small and medium-sized enterprises.

Functions

Smart H.265+ & Smart H.264+
With advanced scene-adaptive rate control algorithm, Dahua smart encoding technology realizes the higher encoding efficiency than H.265 and H.264, provides high-quality video, and reduces the cost of storage and transmission.

WDR
With advanced Wide Dynamic Range (WDR) technology, Dahua network camera provides clear details in the environment of strong brightness contrast. The bright and dark area can get clear video even in high brightness environment or with backlight shadow.

Smart Illumination
Dahua Smart Illumination technology can display image in the environment of low illuminance or completely dark environment. According to the distance of the targets, the camera adjusts Illuminations intensity automatically to display the details of the moving target.

Motion Detection
When moving objects appear in the monitoring image, Dahua Motion Detection (General) technology triggers alarm or records.

Day/Night
Dahua Day/Night function provides color image when illumination is adequate; when illuminance is inadequate, it switches night mode and provides white and black image. It can guarantee that the network camera can work normally when illuminance changes.

Voice Call
With built-in high-sensitivity Mic and high-power speaker, the camera can realize voice call through DMSS client.

Technical Specification

Camera

Image Sensor	1/3”4Megapixel progressive CMOS
Max. Resolution	2560 (H) × 1440 (V)
ROM	128 MB
RAM	128 MB
Scanning System	Progressive
Electronic Shutter Speed	Auto/Manual 1/3 s–1/100,000 s
Min. Illumination	Manual 1/30 s 0. 170 Lux @F2.0 (Color, 80 IRE); 0.165 Lux @F2.0 (W/B, 80 IRE); 0 Lux (IR on) Manual 1/3 s 0.0141 Lux @F2.0 (Color, 80 IRE); 0.0116 Lux @F2.0 (W/B, 80 IRE); 0 Lux (IR on)
S/N Ratio	>46.6 dB
Illumination Distance	10 m (32.8 ft) (IR LED)
Illuminator On/Off Control	Auto
Illuminator Number	1 (IR LED)
Pan/Tilt/Rotation Range	Pan: 0°–360° Tilt: 0°–90°

Lens

Lens Type	Fixed-focal
Mount Type	M12
Focal Length	2.8 mm
Max. Aperture	F2.0
Field of View	Horizontal: 97° Vertical: 52° Diagonal: 116°
Iris Type	Fixed
Close Focus Distance	0.8 m (2.6 ft)

	Detect	Observe	Recognize	Identify
DORI Distance	56.0 m (183.7ft)	22.4 m (73.5 ft)	11.2 m (36.7 ft)	5.6 m (18.4 ft)

Video

Video Compression	H.265; H.264; H.264H; H.264B; MJPEG
Smart Codec	H.264: Yes H.265: Yes
Video Frame Rate	50 Hz Main stream (2560 × 1440 @25 fps), sub stream (640 × 480 @25 fps) Main stream (2304 × 1296 @25 fps), sub stream (640 × 360 @25 fps) Main stream (1920 × 1080 @25 fps), sub stream (320 × 240 @25 fps) 60 Hz Main stream (2560 × 1440 @30 fps), sub stream (640 × 480 @30 fps) Main stream (2304 × 1296 @30 fps), sub stream (640 × 360 @30 fps) Main stream (1920 × 1080 @30 fps), sub stream (320 × 240 @30 fps)
Stream Capability	2 streams
Resolution	4M (2560 × 1440); 3M (2304 × 1296); 1080p (1920 × 1080); 1.3M (1280 × 960); 720p (1280 × 720); VGA (640 × 480); 640 × 360; QVGA (320 × 240)
Bit Rate Control	CBR/VBR
Video Bit Rate	H.264: 184 kbps–6144 kbps H.265: 73 kbps–6144 kbps
Day/Night	Auto (ICR)/Color/B/W
BLC	Yes
HLC	Yes
WDR	DWDR
White Balance	Auto/natural/street lamp/outdoor/manual/regional custom
Gain Control	Auto/Manual
Noise Reduction	3D DNR
Motion Detection	OFF/ON (4 areas, rectangular)
Region of Interest (RoI)	Yes (4 areas)
Smart Illumination	Yes
Image Rotation	0°/90°/180°/270°
Mirror	Yes
Privacy Masking	4 areas

Audio

Built-in MIC	Yes
Audio Compression	AAC; G.711a; G.711Mu

Alarm

Alarm Event	No SD card; SD card full; SD card error; network disconnection; IP conflict; illegal access; voltage detection; motion detection; video tampering

Network

Network	RJ-45 (10/100 Base-T)
SDK and API	Yes
Protocol	HTTP; TCP; ARP; RTSP; RTP; UDP; RTCP; SMTP; FTP; DHCP; DNS; IPv4/v6; QoS; NTP
Interoperability	ONVIF (Profile T/Profile S/Profile G); CGI; DMSS
User/Host	20 (Total bandwidth: 100 M)
Storage	NAS; FTP; SFTP; Micro SD card (256 G)
Browser	IE: IE7 and later Chrome: Chrome 45 and later Firefox: FireFox 46 and later Safari: Mac os Safari12
Management Software	DMSS
Mobile Phone	IOS; Android
Mobile Phone	IOS; Android

Certification

Certification	CE-LVD: EN62368-1 CE-EMC: Electromagnetic Compatibility Directive 2014/30/EU FCC: 47 CFR FCC Part 15, Subpart B

www.dahuasecurity.com

Port

Alarm Input	1 channel in: 5mA 3V~5V DC
Alarm Output	1 channel out: 300mA 12V DC

Power

Power Supply	12V DC/PoE
Power Consumption	Max 3.3W (12V DC)

Environment

Operating Conditions	–10°C to +45°C (14°F to +113°F)/Less than 95%RH
Storage Conditions	–40°C to +60°C (–40°F to +140°F)

Structure

Casing	Plastic
Dimensions	Φ78.5 mm × 90.5 mm × 127.8 mm (3.1" × 3.6" × 5.0") (L ×W×H)
Net Weight	170 g (0.4 lb)
Gross Weight	270 g (0.6 lb)

СҮЛЖЭЭ САЛААЛАГЧ POE-ЫН ШААРДЛАГА

Généralités sur le Produit

DH-PFS4218-16ET-240 est un commutateur PoE dédié pour l'industrie de la sécurité, qui est différent du commutateur général. La fonction de gestion PoE réalise la commande de puissance et l'affichage de la consommation de port en temps réel. Il est largement utilisé dans le projet de surveillance. DH-PFS4218-16ET-240 fournit également une transmission PoE longue distance de 250 mètres et un «port orange» pour un périphérique alimenté par Hi-PoE.

Caractéristiques Techniques

Modèle	DH-PFS4218-16ET-240
Port Ethernet	2 * 10/100/1000 Base-T (port combiné) 2 * 1000 Base-X (port combiné) 16*10/100 (alimentation PoE) Base-T
PoE de Consommation Électrique	Port1/2 prend en charge Hi-PoE (60 W), PoE+, PoE Chaque puissance ≤ 30 W Total ≤ 240 W
Protocole PoE	IEEE802.3af, IEEE802.3at, Hi-PoE
Capacité de Commutation	8,8G
Taux de Transfert de Paquet	5,36Mpps
Humidité	De 10 % à 90 %
Alimentation	De 100 à 240 V CA
Protection Contre la Foudre	Mode commun 4 kV Mode différentiel 2 V
Température de Fonctionnement	De -10 à 55 °C
Poids	3,51 kg
Dimensions (l × P × H)	440 mm × 300 mm × 44 mm

Accessoires

Modèle	
PFT3950	1,25G 850 nm, 500 m, LC, Multi-mode
PFT3960	1,25G 1310/1550 nm, 20 km, LC, Single-mode
PFT3970	1,25G 1550/1310 nm, 20 km, LC, Single-mode

Caractéristiques

- Commutateur PoE de gestion de couche 2.
- Budget PoE : 240 W
- Support PoE, PoE+, Hi-PoE
- Le support «Orange port» Hi-PoE peut être utilisé avec l'extension PoE (PFT1300)
- Transmission PoE longue distance de 250 mètres
- Gestion PoE, PoE Réglage / Statistiques de l'événement / PoE vert
- Rechercher et mettre à niveau via ConfigTool
- Prise en charge de la gestion Web
- Conception de haute protection contre la foudre
- Transmission vidéo sans interruption

Caractéristiques du Service

Système	Nom d'utilisateur/Mot de Passe : admin/admin
	Adresse IP : 192.168.1.110/24
Puissance PoE	240 W
Table MAC	4K
VLAN	VLAN standard 802.1Q
Protocole SpanningTree	STP RSTP
Agrégation de Ports	Agrégation de liaison statique protocole LACP
Miroir	DHCP de Réplication du port de plusieurs-à-un
DHCP	Support DHCP-Client
Mode Longue Distance	Distance de transmission « Power & Data » jusqu'à 250 m
Contrôle de Flux	Semi-duplex basé sur le contrôle du type de pression ; Full duplex basé sur la trame PAUSE
Fonctions de Sécurité	Liaison IP + MAC basée sur le port ; Authentification du port IEEE802.1x
Entretien du Système	Récupération en une seule touche Prise en charge des téléchargements de paquets mis à jour Log système
QoS	Priorité élevée et faible, WRR 802.1P, DSCP Priorité de support selon le protocole
Gestion du Réseau	WEB (protocole http et https) Supporte SNMP V1/V2C/V3
Gestion PoE	Paramètre PoE (consommation de port en temps réel)
	Statistiques de l'événement PoE
	PoE vert (éconénergétique)

- Industrial-grade DID LCD Panel for Continuous Operation
- 1920 x 1080p Resolution
- High-fidelity Digital Signal Processing for Vivid Video
- Built-in 3D Comb Filter and 3D Noise Reduction
- Fast Response Time (5 ms) with no Image Ghosting
- Built-in Speaker
- 16.7 Million Colors
- Supports HDMI and VGA Video Input

Ordering Information

Type	Part Number	Description
43 in. Monitor		Full HD LCD Monitor
Package Contents	1	Monitor
	1	VGA Cable
	1	Power Cable
	1	Pedestal

Technical Specification

System

Viewable Picture Area	42.5 in. (measured diagonally)
Aspect Ratio	16:9
Resolution	1920 x 1080 (Full HD)
Backlight	LED
Brightness/Luminance	350 cd/m²
Contrast	1200:1
Angle of View	Horizontal: 178° Vertical: 178°
Response Time	5 ms
Display Colors	16.7 Million

Interface

Video Inputs	• One (1) HDMI • One (1) VGA (D-sub)
Audio	Input: One (1) Channel, RCA Output: Built-in Speaker

Electrical

Power Supply	100 VAC to 240 VAC (±10%), 50/60 Hz
Consumption	Standard: 58 W Standby: ≤ 0.5 W

Construction/Environmental

Dimensions (without base)	967.0 x 561.0 mm x 86.0 mm (38.07 in. x 22.09 in. x 3.39 in.)
Weight	7.70 kg (16.98 lb)
Operating Temperature	0 °C to 40 °C (32 °F to 104 °F)